STATE OF FLORIDA E&SC DESIGNER & REVIEWER MANUAL; LATEST EDITION: JULY 2013

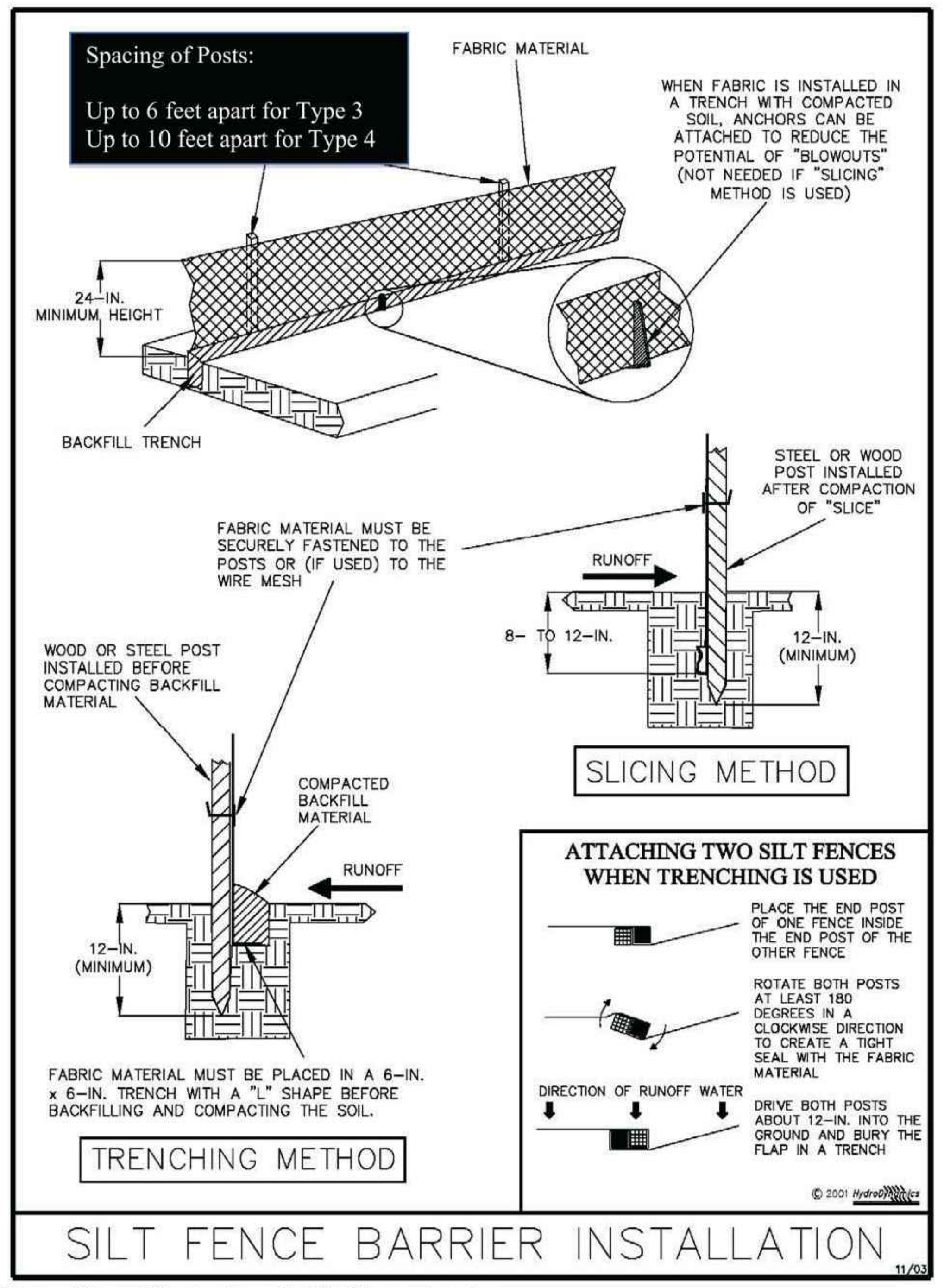

Figure V-2: Illustration of a Silt Fence Barrier

Permission is given by HydroDynamics Incorporated to copy and reproduce this detail

V-7

1 (C-3.3) SILT FENCE DETAIL
NOT TO SCALE

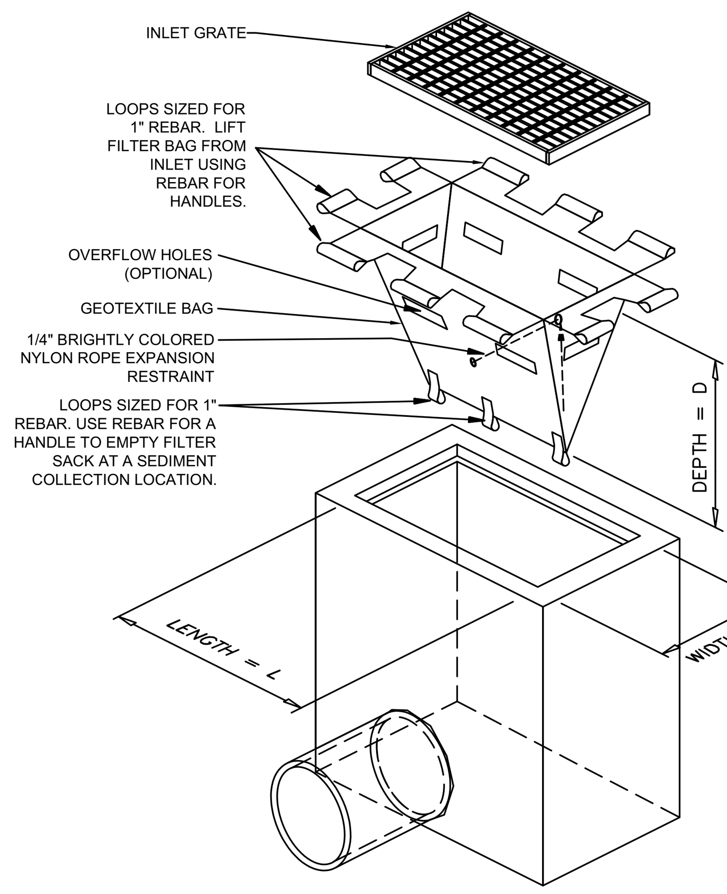

ISOMETRIC VIEW

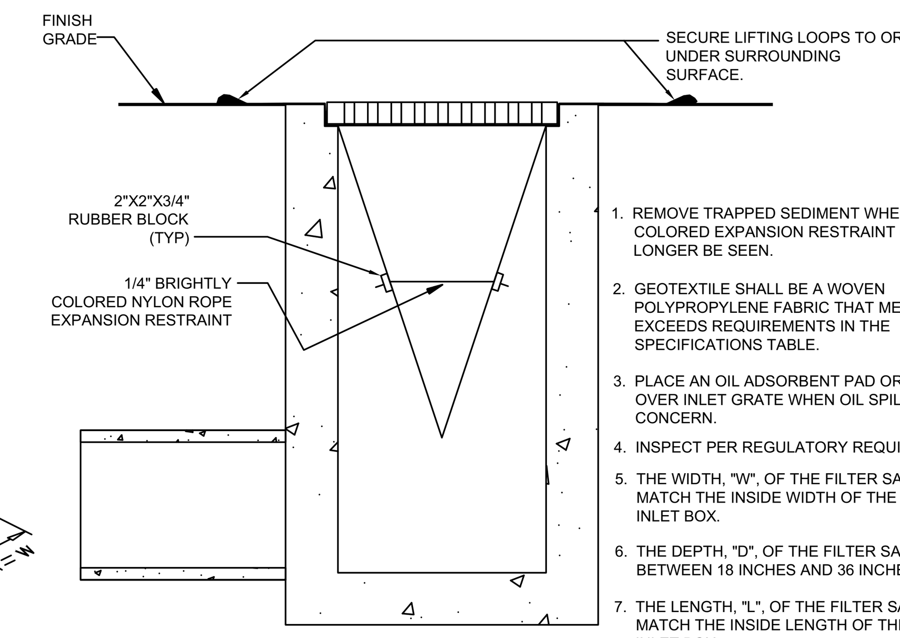

SECTION VIEW
PROFILE VIEW OF INSTALLED FILTER SACK

1. REMOVE TRAPPED SEDIMENT WHEN BRIGHTLY COLORED EXPANSION RESTRAINT CAN NO LONGER BE SEEN.
2. GEOTEXTILE SHALL BE A WOVEN POLYPROPYLENE FABRIC THAT MEETS OR EXCEEDS REQUIREMENTS IN THE SPECIFICATIONS TABLE.
3. PLACE AN OIL ADSORBENT PAD OR PILLOW OVER INLET GRATE WHEN OIL SPILLS ARE A CONCERN.
4. INSPECT PER REGULATORY REQUIREMENTS.
5. THE WIDTH, "W", OF THE FILTER SACK SHALL MATCH THE INSIDE WIDTH OF THE GRATED INLET BOX.
6. THE DEPTH, "D", OF THE FILTER SACK SHALL BE BETWEEN 18 INCHES AND 36 INCHES.
7. THE LENGTH, "L", OF THE FILTER SACK SHALL MATCH THE INSIDE LENGTH OF THE GRATED INLET BOX.

LOW TO MODERATE FLOW GEOTEXTILE FABRIC SPECIFICATION TABLE		
PROPERTIES	TEST METHOD	UNITS
GRAB TENSILE STRENGTH	ASTM D-4632	300 LBS
GRAB TENSILE ELONGATION	ASTM D-4632	20 %
PUNCTURE	ASTM D-4833	120 LBS
MULLEN BURST	ASTM D-3786	800 PSI
TRAPEZOID TEAR	ASTM D-4533	120 LBS
UV RESISTANCE	ASTM D-4355	80 %
APPARENT OPENING SIZE	ASTM D-4751	40 US SIEVE
FLOW RATE	ASTM D-4491	40 GAL/MIN/SQ FT
PERMITTIVITY	ASTM D-4491	0.55 SEC -1

MODERATE TO HIGH FLOW GEOTEXTILE FABRIC SPECIFICATION TABLE		
PROPERTIES	TEST METHOD	UNITS
GRAB TENSILE STRENGTH	ASTM D-4632	265 LBS
GRAB TENSILE ELONGATION	ASTM D-4632	20 %
PUNCTURE	ASTM D-4833	135 LBS
MULLEN BURST	ASTM D-3786	420 PSI
TRAPEZOID TEAR	ASTM D-4533	45 LBS
UV RESISTANCE	ASTM D-4355	90 %
APPARENT OPENING SIZE	ASTM D-4751	20 US SIEVE
FLOW RATE	ASTM D-4491	200 GAL/MIN/SQ FT
PERMITTIVITY	ASTM D-4491	1.5 SEC -1

2 (C-3.3) INLET FILTER DETAIL
NOT TO SCALE

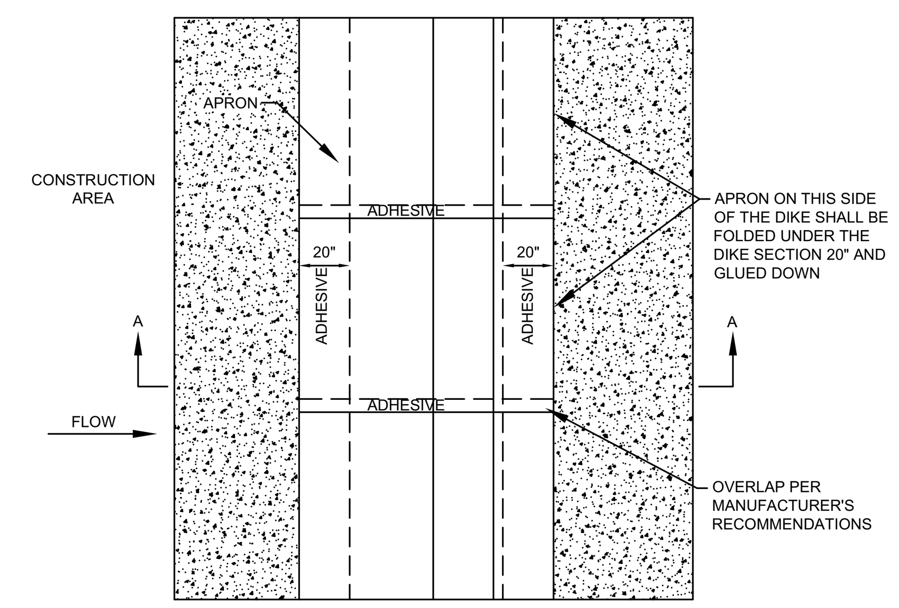

DIKE PLAN VIEW

NOTES:

1. INSTALLED SILT DIKE UNIT SHALL HAVE CONTINUOUS AND FIRM CONTACT WITH PAVEMENT.
2. ADHESIVES SHALL BE LIQUID NAIL OR APPROVED EQUAL FOR CONCRETE PAVEMENT APPLICATIONS AND EMULSIFIED ASPHALT FOR ASPHALT APPLICATIONS. ADHESIVE SHALL BE PLACED WHERE THE UNITS OVERLAP AND A 20" STRIP ALONG BOTH EDGES.

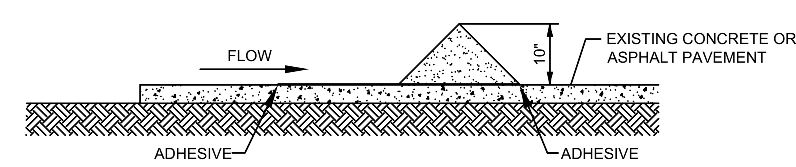

SECTION A-A

3 (C-3.3) SILT DIKE ON EXISTING PAVEMENT
NOT TO SCALE

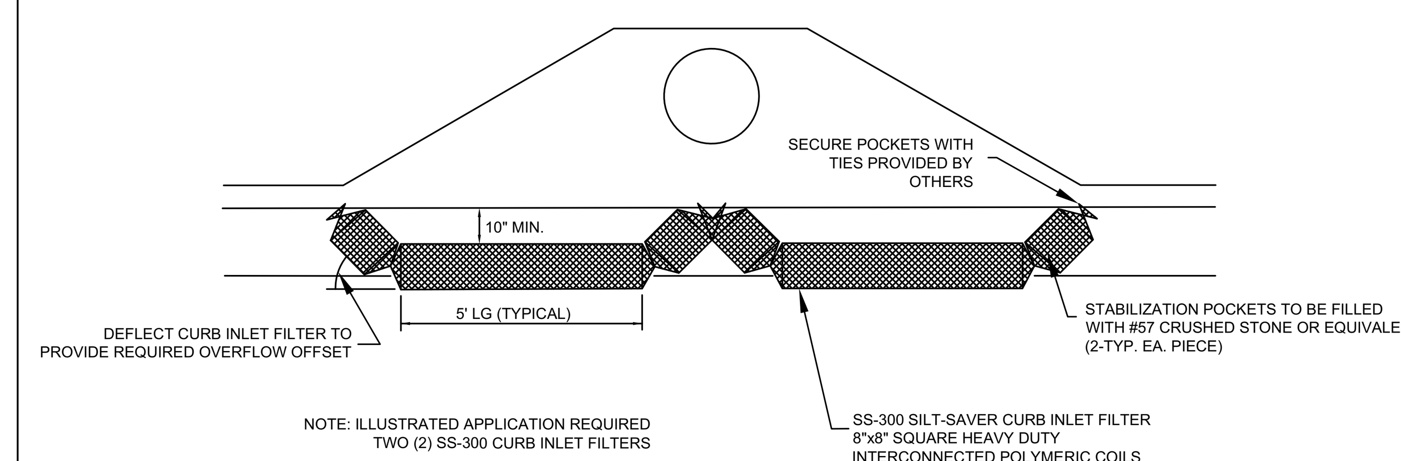

NOTE: ILLUSTRATED APPLICATION REQUIRED TWO (2) SS-300 CURB INLET FILTERS

INSTALLATION PROCEDURE:
1. IDENTIFY OPENING DIMENSIONS TO DETERMINE THE NUMBER OF SS-300 CURB INLET FILTERS THAT WILL BE REQUIRED.
2. COMPLETELY FILL THE STABILIZATION CHAMBER ON EACH END OF EACH SS-300 CURB INLET FILTER WITH #57 CRUSHED STONE.
3. SECURE ENDS OF THE STAVILIZATION POCKETS WITH TIES TO BE PROVIDED BY OTHERS.
4. PLACE THE SS-300 CURB INLET FILTER(S) IN FRONT OF THE CURB INLET OR OPENING TO PREVENT THE MIGRATION OF SILT INTO THE STORM DRAIN SYSTEM.

4 (C-3.3) CURB INLET FILTER
NOT TO SCALE

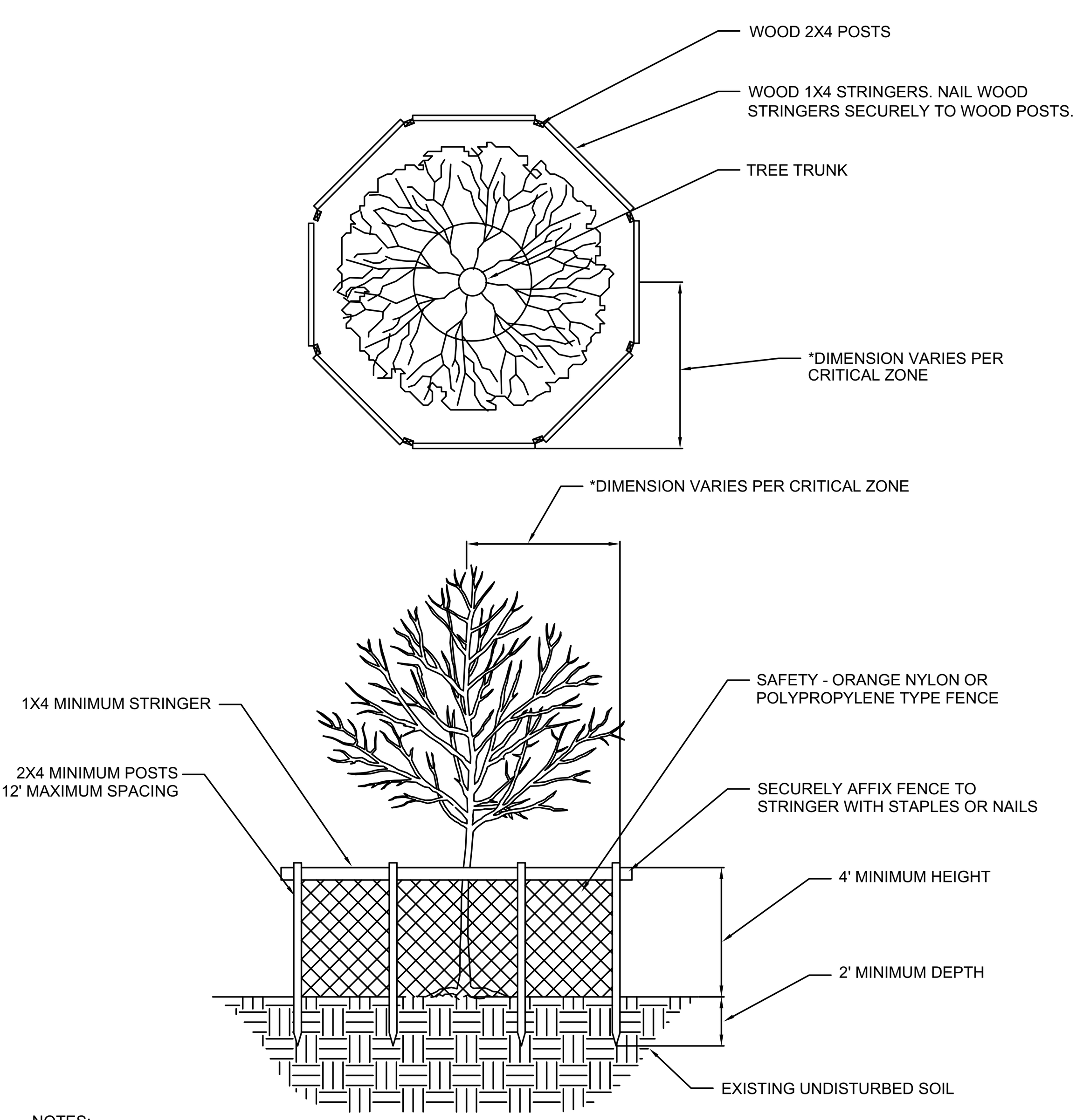

NOTES:
CRITICAL PROTECTION ZONE: THE AREA SURROUNDING A TREE WITHIN A CIRCLE DESCRIBED BY A RADIUS OF ONE FOOT FOR EACH INCH OF THE TREE TRUNK DIAMETER AT 54" ABOVE FINISHED GRADE. FOR GROUPS OF TREES, PLACE BARRICADES BETWEEN TREES AND CONSTRUCTION ACTIVITY.

* TREE PROTECTION BARRICADE SHALL BE LOCATED TO PROTECT A MINIMUM OF 75% OF THE CRITICAL PROTECTION ZONE.

5 (C-3.3) TREE BARRIER
NOT TO SCALE

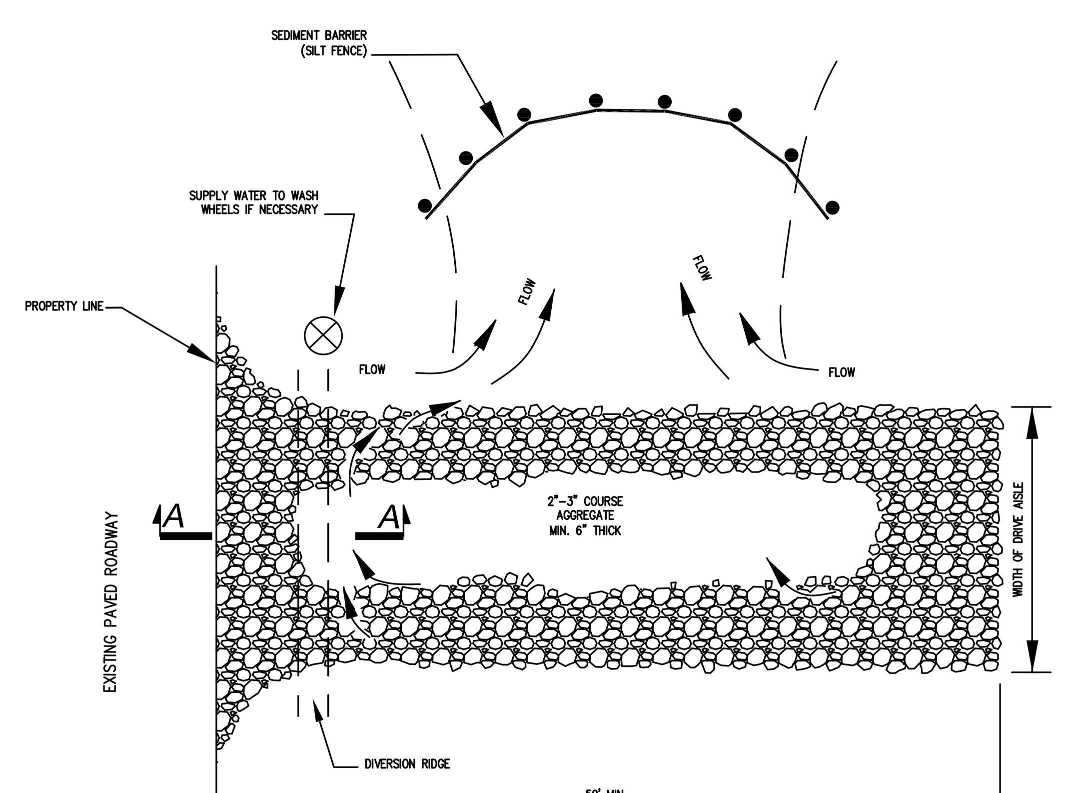

PLAN
N.T.S.

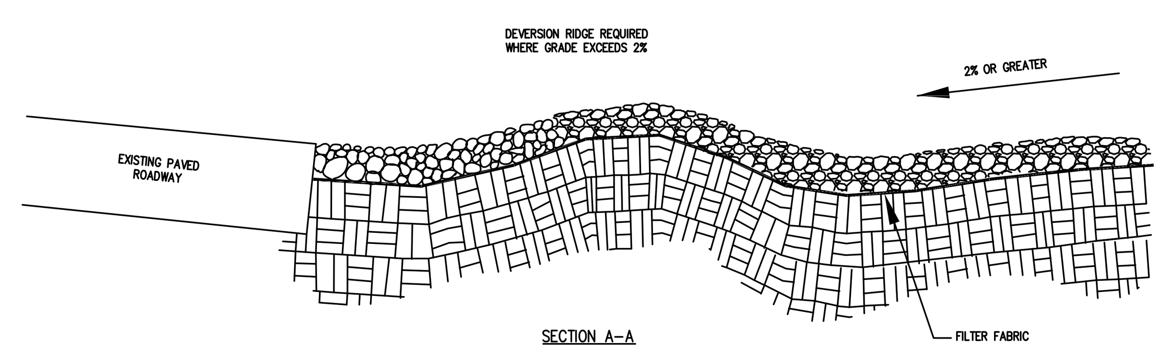

SECTION A–A
N.T.S.

NOTE:
USE SILT FENCE ONLY

NOTES:
1. THE ENTRANCE SHALL BE MAINTAINED IN A CONDITION THAT WILL PREVENT TRACKING OR FLOWING OF SEDIMENT ONTO PUBLIC RIGHTS–OF–WAY. THIS MAY REQUIRE TOP DRESSING, REPAIR AND/OR CLEAN–OUT OF ANY MEASURES USED TO TRAP SEDIMENT.
2. WHEN NECESSARY, WHEELS SHALL BE CLEANED PRIOR TO ENTRANCE ONTO PUBLIC RIGHT–OF–WAY
3. WHEN WASHING IS REQUIRED, IT SHALL BE DONE ON A AREA STABILIZED WITH CRUSHED STONE THAT DRAINS INTO AN APPROVED SEDIMENT TRAP OR SEDIMENT BASIN.
4. ANY SEDIMENT TRACKED ONTO ROADWAYS SHALL BE SWEPT BACK ONTO SITE AT THE END OF EACH WORKING DAY.

6 (C-3.3) STABILIZED CONSTRUCTION EXIT
NOT TO SCALE

Chick-fil-A
5200 Buffington Road
Atlanta, Georgia 30349-2998

Bowman
Certificate of Authorization License No. 30462
910 SE 17th St, Suite 300
Fort Lauderdale, FL 33316
Phone: (954) 314-8481
www.bowman.com

© 2021 Bowman Consulting Group Ltd

Seal

This item has been digitally signed and sealed by Andres Mizrahi, P.E. on the date adjacent to this seal

Printed copies of this document are not considered signed and sealed and the signature must be verified on any electronic copies.

ANDRES MIZRAHI LICENSE No. 92421 STATE OF FLORIDA PROFESSIONAL ENGINEER

2023.08.29 15:16:42-04'00'
ANDRES MIZRAHI, P.E.
FLORIDA REG. NO. 92421

CHICK-FIL-A
ATLANTIC & POWERLINE
2100 W ATLANTIC BLVD
POMPANO BEACH, FL 33069

FSR#05557

BUILDING TYPE / SIZE: P14 LS BN

REVISION SCHEDULE

NO.	DATE	DESCRIPTION

CONSULTANT PROJECT #	010014-01-208
PRINTED FOR	PERMIT
DATE	8/24/2023
DRAWN BY	STC

Information contained on this drawing and in all digital files produced for above named project may not be reproduced in ... express written or ... from authorized project representatives.

SHEET
EROSION CONTROL DETAILS

PERMIT

SHEET NUMBER
C-3.3

DRC
PZ23-12000037
10/04/2023

DRC
PZ23-12000037
12/06/2023

FILE PATH: ...0014 – Chick–fil–A\0...4–01–208 (ENG) – 05557 Atlantic Powerline FSU Pompano\Engineering\Engineering Plans\Sheets\09–010014–01–208–ESD.dwg 8/24/2023
THIS DOCUMENT, TOGETHER WITH THE CONCEPTS AND DESIGNS PRESENTED HEREIN, AS AN INSTRUMENT OF SERVICE, IS INTENDED ONLY FOR THE SPECIFIC PURPOSE AND CLIENT FOR WHICH IT WAS PREPARED. REUSE OF AND IMPROPER RELIANCE ON THIS DOCUMENT WITHOUT WRITTEN AUTHORIZATION AND ADAPTATION BY BOWMAN CONSULTING SHALL BE WITHOUT LIABILITY TO BOWMAN CONSULTING.